VAGINAL IRRITATION TEST
MTT Effective Time-50 (ET-50) Protocol

For use with EpiVaginal™ (VEC-100) Tissue Model

I. Storage of Tissue (VEC-100) and MTT Kit (MTT-100)

a) **Storage:** Upon receipt of the EpiVaginal Tissue Model, store the sealed plate containing the EpiVaginal tissues at room temperature (20-25°C) until use and the Maintenance Medium into the refrigerator (2-8°C). Storage conditions for components of the EpiVaginal kit and the MTT tissue viability kit (MTT-100) are summarized in the following table.

Part #	Description	Conditions	Shelf Life
VEC-100	EpiVaginal cultures	Room Temp. (20-25°C)	96 hours*
VEC-100-MM	Maintenance/ Assay Medium	Refrigerate (2-8°C)	14 days
MTT-100-DIL	MTT diluent	Refrigerate (2-8°C)	2 months**
MTT-100-CON	MTT concentrate	Freeze (-20±5°C)	2 months**
MTT-100-EXT	MTT Extractant	Room temperature	1 year**

*Notes: *Refers to storage time at room temperature in the unopened package from the time of shipment.*
***MTT kits must be ordered separately.*

II. Preparation of EpiVaginal

a) **Prepare HNG-TOP-12 plate:** For each kit of VEC-100 tissues, pre-warm 125 mL of VEC-100-MM in a 37±1°C water bath for 10 minutes. Under sterile conditions, open the HNG-TOP-12 and remove together the regular lid and the hanging-top lid from the bottom of the 12-well plate. Pipette 5.0 mL of the pre-warmed VEC-100-MM medium into each well of the 12-well plate and replace the hanging-top. See **Figure 1**.

b) **Transfer tissues:** Under sterile conditions, open the package containing the tissue samples and using sterile forceps, transfer the inserts from the agarose package into the hanging-top lid. Care should be taken to remove any agarose sticking to the outside of the cell culture inserts containing the tissue samples.

c) **Pre-equilibration**: Place the regular lid over the hanging-top lid and return the fully assembled HNG-TOP-12 plate containing the EpiVaginal samples into a humidified incubator overnight at 37±1°C, 5±1% CO_2. This pre-equilibration allows the tissues to recover from the stress of shipping. *Note: Any air bubbles trapped underneath the cell culture insert should be released (tilt the cell culture insert using a sterile forceps) so that adequate nutrients are supplied to the EpiVaginal tissues.*

d) **Partial kit testing:** If all 24 tissues are not needed on day 1 of testing, carefully open the plastic bag containing the 24-well plate/EpiVaginal tissues and remove the tissues for day 1 testing under sterile conditions. Return the cover to the 24-well plate containing the remaining tissues and put the 24-well plate back in the original bag without sealing it (a new plastic bag, e.g. a Ziplock™ bag, can also be used). Place the 24-well plate in the open plastic bag into the incubator and allow the atmosphere within the bag to re-equilibrate with 5±1% CO_2 for 10 minutes. Prior to removing the bag from the incubator, re-seal the bag so that the 5±1% CO_2 atmosphere will be maintained. Place the sealed bag containing the tissues at room temperature (20-25°C) where it can be stored for an additional 24 hours.

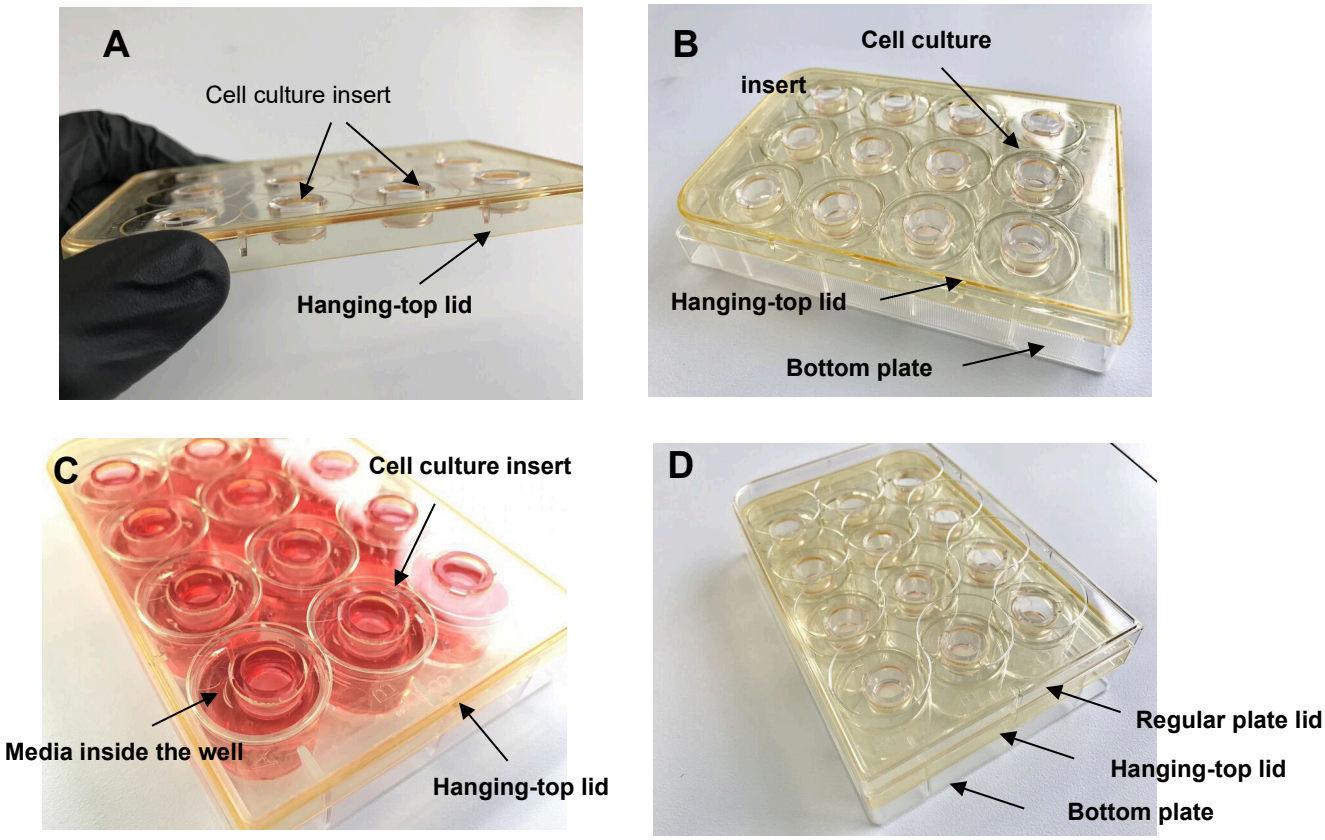

Figure 1: (**A**) Cell culture inserts (8.8 mm ID) in the hanging-top lid; (**B**) Hanging-top lid with inserts on top of the bottom plate without media; (**C**) Hanging-top lid on top of the bottom plate containing media; (**D**) Fully assembled HNG-TOP-12.

III. Dosing

a) **Exposure times:** Initial time range finding exposure times of 1, 4, and 18 hours dosed in duplicate or triplicate EpiVaginal tissues are recommended. Other initial times may be chosen based on Table 1 (Section VI). For mild test articles, include a 48 hour exposure.

b) **Negative controls:** 2 tissues are dosed for 4 hours with 100 µL of ultrapure H_2O to serve as negative controls.

c) **Positive controls:** 1.0% Triton X-100 is provided with the VEC-100 kit. The typical ET-50 falls between 45 and 120 minutes. Recommended dosing times are 45 and 120 minutes. 100 µL of the positive control (as supplied) should be applied to duplicate tissues. *Notes: a) If more than 1 kit of EpiVaginal from a single tissue lot is being tested, it is not necessary to run negative and positive controls from each kit. b) MatTek tests every lot of EpiVaginal with 1.0% Triton X-100 – these data are available by late Wednesday each week.*

Figure 2: Dosing Configuration

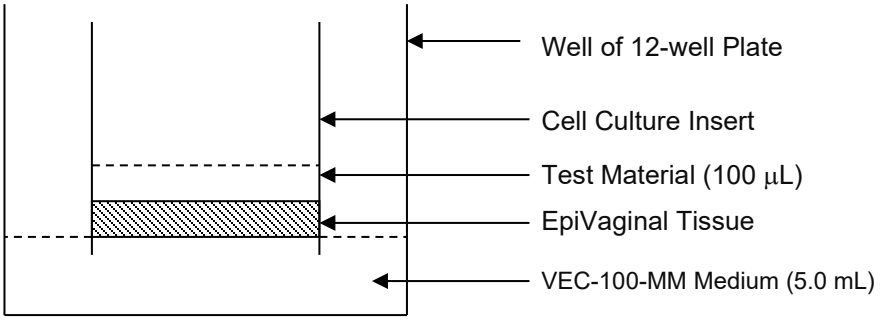

d) **Replace medium:** Following the overnight equilibration (section II), aspirate off the VEC-100-MM medium contained within the 12-well plates and replace with 5.0 mL (per well) of pre-warmed, fresh medium. *Notes: Any air bubbles trapped underneath the cell culture insert should be released (tilt the cell culture insert with a sterile forceps) so that adequate nutrients are supplied to the EpiVaginal samples during the dosing period.*

e) **Apply dose:** Add 100 μL of the test article into the cell culture insert onto the apical surface of the EpiVaginal tissue. Do not add the test material to the medium in the well. Negative controls (no dose, or diluent for diluted samples) should be treated in an identical manner to the dosed inserts. See **Figure 2**. *Note: Test materials can be added to the medium to model systemic exposure of the test article.*

f) **Exposure time:** Return the 12-well plates containing the dosed EpiVaginal samples to the incubator for the desired time periods.

g) **Prepare MTT solution:** Approximately 1 hour prior to the end of the first dosing period, prepare the MTT solution. If you are using the MTT-100, thaw the MTT concentrate and dilute with the MTT diluent (provided). If you are making your own MTT solution, use 1 mg/mL MTT diluted in DMEM. Spin down (300 g for 5 minutes) the MTT solution to remove any precipitate present. Store the remaining MTT solution in the dark at 4°C for the later time points. *Note: To get optimal results, MTT solutions should not be stored for more than 1 day since MTT will degrade with time*.

h) **Prepare MTT plate:** 15 minutes before each dosing period is complete, prepare a 24-well plate (provided) with the diluted MTT solution (1 mg/mL). Pipet 300 μL of the MTT solution into the appropriate number of wells of the 24-well plate to accommodate all the inserts for the time period which is ending. Label the 24-well plate top to indicate to which wells the samples will be transferred. Label the second 24-well plate in an identical manner for later use in the extraction step. Also, label vials in which media samples will be stored if LDH or inflammatory mediator release measurements are to be made.

i) **Transfer samples to MTT plate:** After exposure of the EpiVaginal samples to the test material(s) is complete, decant any liquid remaining atop the EpiVaginal samples. Remove each insert individually and gently rinse with PBS (provided) to remove any residual test material. Repeat this rinse a second time. Shake off excess liquid prior to placing the EpiVaginal sample into the MTT-containing 24-well plate. In the 24-well plate, make sure that no air bubbles are trapped underneath the cell culture insert.

j) **Media for inflammatory mediator analysis (*optional*):** Save the assay media from the 12-well plates in the labeled vials for subsequent LDH, PGE-2, IL-1α or other inflammatory mediator/cytokine analysis. Samples for LDH and IL-1α samples should be stored at -20±5°C; samples to be assayed for PGE-2 should be stored under nitrogen and frozen.

k) **MTT loading:** Return the EpiVaginal samples in the 24-well plate to the incubator for 3 hours. See **Figure 3**. *Note: Deviations from the 3 hour time for MTT incubation will result in different MTT readings. For consistency it is recommended that the 3 hour MTT incubation time be adhered to very strictly.*

Figure 3: Incubation in the MTT solution (37±1°C, 95% rH, 3 hours)

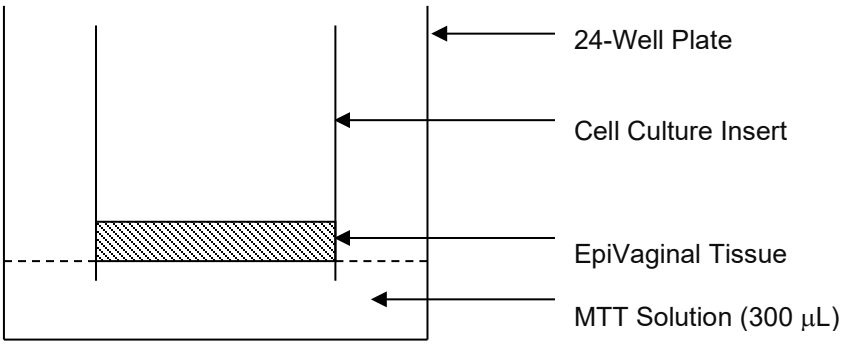

l) **Reduction of MTT by Test Article:** To ensure that the MTT reaction is accurately measuring the tissue viability, it is necessary to determine whether the test article (TA) can directly reduce MTT. A 1.0 mg/mL MTT solution is prepared as above and 100 μL of the neat TA is added to 1 mL of the MTT solution. This mixture is incubated in the dark at room temperature for 60 minutes.

A negative control, 100 μL of ultrapure water, is tested concurrently. If the MTT solution color turns blue/purple (or if a blue/purple precipitate is observed), the TA has reduced the MTT; the absence of darkening indicates that the TA does not directly reduce MTT.

If the TA reduces MTT, a false viability measurement is obtained only if the TA remains bound to the tissue after rinsing. To test for residual TA induced MTT reduction, a single killed tissue (part # VEC-100-Frozen) is treated with the TA in the normal fashion. The incubation should be the longest incubation used for that TA. Rinsing and MTT exposure should be performed normally. An untreated killed control will be tested in parallel since a small amount of MTT reduction is expected from the residual NADH and associated enzymes within the killed tissue. If little or no MTT reduction is observed in the TA treated killed control, the MTT reduction observed in the TA treated viable tissue may be ascribed to the viable cells. If there is appreciable MTT reduction in the treated killed control (relative to the amount in the treated viable tissue), additional steps must be taken to account for the chemical reduction or the TA may be considered untestable with MTT. If the direct reduction of MTT by the TA is less than 30% of the negative control value, the net OD of the treated killed control may be subtracted from the new ODs of the live TA-treated tissues. If the direct reduction by the TA is greater than 30% of the negative control value, please contact MatTek technical assistance for further guidance.

IV. Extraction

a) **Transfer samples to extraction plate:** After the 3 hour MTT incubation, remove each insert individually and gently blot the bottom with a Kimwipe. Place the inserts into the pre-labeled 24-well extraction plate.

b) **Add extractant:** Completely immerse the cell culture inserts in 2.0 mL of the extractant solution. See **Figure 4**. Cover the extraction plate to reduce evaporation of extractant. *Note: If the test article is colored and/or does not completely rinse off, pipet 1.0 mL of extractant into each well. This will ensure the MTT is extracted through the bottom of the tissue culture insert and not both the apical and basolateral. After extraction is complete (step c below), remove the insert and add an additional 1.0 mL of extractant to bring the total volume to 2.0 mL.*

c) **Extraction conditions:** Place the extraction plate with its top in place into a sealable plastic bag (e.g. Zip-lock) to minimize extractant evaporation. Allow the extraction to proceed for 2 hours at room temperature (RT) on an orbital shaker or overnight (without shaking) at RT in the dark. Protect the plate from light while shaking using aluminum foil. Shaking should be vigorous enough for some mixing within the wells, but not too vigorous such that liquid will leave the wells. We recommend allowing the extractions to proceed until all samples have been extracted for at least 2 hours (with shaking) or overnight (without shaking) so that all MTT readings can be made at once. As long as evaporation of solvent is prevented, extraction times beyond 2 hours will not affect MTT readings. *Note: If you are using your own reagents, the extractant should* ***not*** *contain acid (e.g. hydrochloric acid).*

d) **Decant extractant back into 24-well plate:** After the extraction is complete, decant the liquid within the apical membrane of each insert back into the well from which it was taken (i.e. mix the solution with the extractant in the well). This will result in 2.0 mL of total extractant per well. The inserts can be discarded.

Figure 4: Extraction Configuration

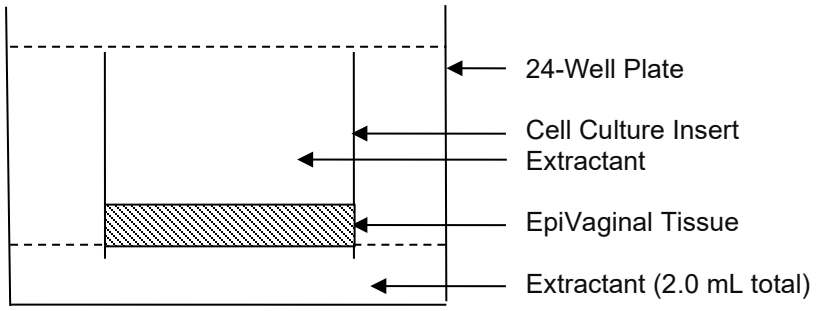

V. Construction of Dose Response Curve

a) **Mix extractant solutions:** Pipet the extractant solution up and down at least 3 times to ensure that the extraction solutions are well mixed.

b) **Transfer to 96-well plate:** Pipet 200 µL of the mixed extraction solution into a 96-well microtiter plate. *Note*: *If a 96-well plate reader is not available, any visible spectrophotometer can be used to determine optical density of the extractant solution.*

c) **Measure optical density:** Determine the optical density of the extracted samples at 570 nm using 200 µL of extractant as a blank. *Note: Subtracting out a background reading for all samples at 650 nm improves the quality of the data; in addition, wavelengths between 540-570 can be used equally as well.*

d) **Calculate % viability:** Determine the % viability at each of the dosed concentrations using the following formula:

% viability = 100 x [OD(sample)/OD(negative control)]

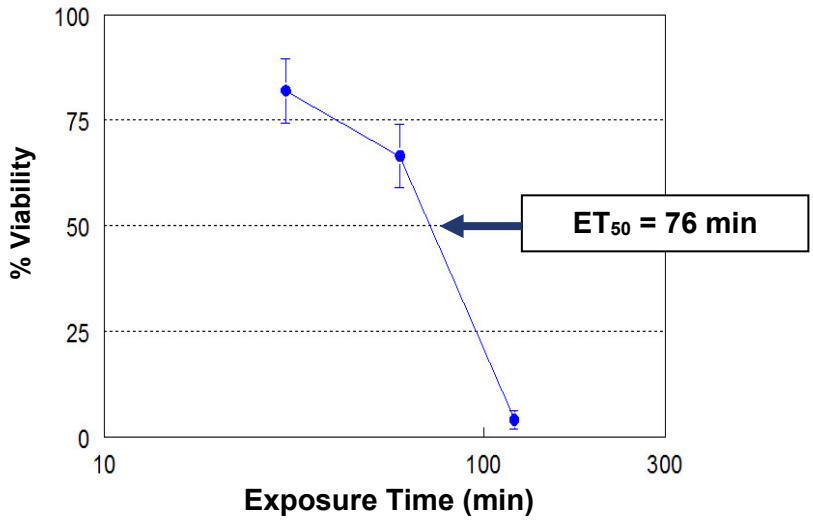

Figure 5: Representative dose response curve for VEC-100 tissues following topical application (100 µL/insert) of Triton X-100 (1%). Tissue viability was determined using the MTT assay referenced to untreated control tissues. The ET_{50} value is the exposure time that reduces the tissue viability to 50%.

e) **Construct dose response curve:** Using a semi-log scale, plot the % viability (linear *y* axis) versus the dosing time (log *x* axis). By interpolation, the time at which the % viability has dropped to 50% is considered the "rough" ET-50 value. See **Figure 5**. *Note: An excel spreadsheet is available from MatTek technical service for computation of ET-50.*

f) **Choose additional times (if necessary):** Based on the time range finding plot, additional time points may be necessary or desirable. For instance, if ET-50s fall between 4 and 18 hrs use of 8 and/or 12 hour time points may differentiate irritancy levels of similar test articles. Please contact MatTek personnel for assistance.

VI. Correlation of *In vitro* and *In vivo* Results

a) **Use of benchmark materials of known in vivo irritancy:** It is always best to compare your assay results to those of benchmark materials. A benchmark could be a material that is recognized as an industry leader or one for which clinical or customer responses are well known. By comparing the test results to those of the benchmark, one can gauge how the irritancy level of the test material will compare to that of the benchmark. A list of benchmark materials with approximate ET-50 values are given in Table 1 for guidance. MatTek scientists will be glad to assist you in picking appropriate benchmarks.

Table 1: EpiVaginal ET-50 ranges for various feminine hygiene products

Material type	ET-50 range
Triton X-100 (1%)	0.70-1.70 hr
Feminine washes (3 tested)	1-3 hrs
Spermicides (4 tested)	3-7 hrs
Anti-itch creams (4 tested)	6-18 hrs
Lubricant (1 tested)	>24 hrs
Antifungal products (3 tested)	>24 hrs
Douche (1 tested)	>24 hrs

VII. Materials Provided

EpiVaginal® (Part No. VEC-100)

Quantity	Description	Part No.
24	EpiVaginal tissue-model samples	VEC-100
2	12-well hanging top plates (sterile)	HNG-TOP-12
2	24-well plates (sterile)	MW-15-003-0028
100 mL	PBS rinse solution	TC-PBS
250 mL	Maintenance medium	VEC-100-MM
10 mL	1% Triton X-100 solution	TC-TRI
1	MTT Protocol	MK-24-007-0025

VIII. Optional Materials

MTT Assay Kit (Part No. MTT-100)

Quantity	Description	Part No.
8 mL	MTT diluent solution	MTT-100-DIL
60 mL	Extractant solution	MTT-100-EXT
2 mL	MTT concentrate (5:1)	MTT-100-CON

Additional Materials

Quantity	Description	Part No.
250 mL	Maintenance medium (for extended culture times)	VEC-100-MM